Force Engineering & Testing
19530 Ramblewood Drive
Humble, Texas 77338
Phone: (281) 540-6603 FAX: (281) 540-9966
Website: www.forceengineeringtesting.com

Product Evaluation Report

DIMENSIONAL METALS, INC.

IL 20 24 Ga. 18" Wide Roof Panel over 22 Ga. Metal Deck

Florida Product Approval # 4236.2 R7

Florida Building Code 2023
Per Rule 61G20-3
Method: 1 –D

Category: Roofing
Subcategory: Metal Roofing
Compliance Method: 61G20-3.005(1)(d)
NON HVHZ

Product Manufacturer:
Dimensional Metals, Inc.
819 South Salisbury GQ Ave.
Salisbury, NC 28146

Engineer Evaluator:
Johnathan Green, P.E. #88223
Florida Evaluation ANE ID: 12901

Contents:

Evaluation Report: Page 1 - 3
Installation Detail: Page 4

SEP 04 2023

JOHNATHAN GREEN
LICENSE
No. 88223
STATE OF
FLORIDA
PROFESSIONAL ENGINEER

THIS DOCUMENT HAS BEEN DIGITALLY SIGNED AND SEALED BY JOHNATHAN GREEN ON THE DATE ADJACENT TO THE SEAL.

PRINTED COPIES OF THIS DOCUMENT ARE NOT CONSIDERED SIGNED AND SEALED AND THE SIGNATURE MUST BE VERIFIED ON ANY ELECTRONIC COPIES.

Force Engineering & Testing
19530 Ramblewood Drive
Humble, Texas 77338
Phone: (281) 540-6603 FAX: (281) 540-9966
Website: www.forceengineeringtesting.com

Compliance Statement: The product as described in this report has demonstrated compliance with the Florida Building Code 2023, Sections 1504.3.2.

Product Description: IL 20, 1 ¾" Snap Lock Standing Seam Roof Panel, 24 Ga., 18" Wide, Roof Panel restrained with clips at 48" O.C. over 22 Ga. Steel Deck. Non-structural Application.

Panel Material/Standards:
Material: 24 Ga. Steel, ASTM A792 or ASTM A653 G90 conforming to Florida Building Code 2023 Section 1507.4.3.
Paint Finish: Optional
Corrosion Resistance: Panel Material shall comply with Florida Building Code 2023, Section 1507.4.3.

Panel Dimension(s):

Thickness:	0.023"
Width:	18" Max Coverage
Rib Height:	1-3/4"
Panel Seam:	Snap Seam

Roof Panel Clips:

Product Name:	IL20 Clip, One Piece fixed
Description:	18 Ga. Steel, 3 5/8" long
Bearing Plate:	UB-2 Type II, 18 Ga., 3 5/8"x 5 7/8" or UB-2 Modified, 18 Ga., 3 5/8"x 5 7/8"
Corrosion Resistance:	Per Florida Building Code 2023 Section 1506.7

Fasteners:
Panel Clip to Bearing Plate Fastener: (2) #10 -16 Pancake Self Driller
Bearing Plate to Steel Deck Fastener: (2) #14-13 Truss Head Self Driller
Optional: Panel Clip to Steel Deck Fastener: (2) #14-13 Truss Head Self Driller
¾" minimum penetration through steel deck
Corrosion Resistance: Per Florida Building Code 2023, Section 1507.4.4.

Substrate Description: Steel Deck, Min. 22 Ga., Min. Fy =33 ksi. Design of steel deck is outside the scope of this evaluation. Steel Deck must be designed in accordance w/ Florida Building Code 2023.

Allowable Design Uplift Pressures:

Table "A"

Maximum Total Uplift Design Pressure:	52.5 psf
Clip Spacing:	48" O.C.
# Fasteners per Clip:	2

*Design Pressure includes a Safety Factor = 2.0.

Force Engineering & Testing
19530 Ramblewood Drive
Humble, Texas 77338
Phone: (281) 540-6603 FAX: (281) 540-9966
Website: www.forceengineeringtesting.com

Code Compliance: The product described herein has demonstrated compliance with The Florida Building Code 2023, Section 1504.3.2.

Evaluation Report Scope: The product evaluation is limited to compliance with the structural wind load requirements of the Florida Building Code 2023, as relates to Rule 61G20-3.

Performance Standards: The product described herein has demonstrated compliance with:

- UL 580-06 - Test for Uplift Resistance of Roof Assemblies

Reference Data:

1. UL 580-94 Uplift Test
   Underwriters Laboratories, Inc.
   UL File R15841, UL Construction #498B
2. Certificate of Independence
   By Johnathan Green, P.E. (No. 88223) @ Force Engineering & Testing
   (FBC Organization # ANE ID: 12901)

Test Standard Equivalency:

1. The UL 580-94 test standard is equivalent to the UL 580-06 test standard.

Quality Assurance Entity: The manufacturer has established compliance of roof panel products in accordance with the Florida Building Code and Rule 61G20-3.005 (3) for manufacturing under a quality assurance program audited by an approved quality assurance entity.

Minimum Slope Range: Minimum Slope shall comply with Florida Building Code 2023, including Sections 1507.4.2 and in accordance with Manufacturers recommendations.

Installation: Install per manufacturer's recommended details.

Underlayment: Per Florida Building Code 2023 and manufacturer's installation guidelines.

Gypsum Board: 5/8" maximum thickness gypsum board (Optional).

Insulation: 1" Minimum, 6" Maximum thickness, Polyisocyanurate foamed plastic with min. 1.8 pcf density.

Roof Panel Fire Classification: Fire classification is not part of this acceptance.

Shear Diaphragm: Shear diaphragm values are outside the scope of this report.

Design Procedure: Based on the dimensions of the structure, appropriate wind loads are determined using Chapter 16 of the Florida Building Code 2023 for roof cladding wind loads. These component wind loads for roof cladding are compared to the allowable pressure listed above. The design professional shall select the appropriate erection details to reference in his drawings for proper fastener attachment to his structure and analyze the panel fasteners for pullout and pullover. Support framing must be in compliance with Florida Building Code 2023 Chapter 22 for steel, Chapter 23 for wood and Chapter 16 for structural loading.

Force Engineering & Testing
19530 Ramblewood Drive
Humble, Texas 77338
Phone: (281) 540-6603 FAX: (281) 540-9966
Website: www.forceengineeringtesting.com

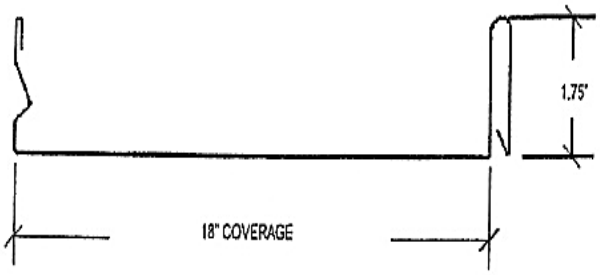

IL2018 PANEL PROFILE

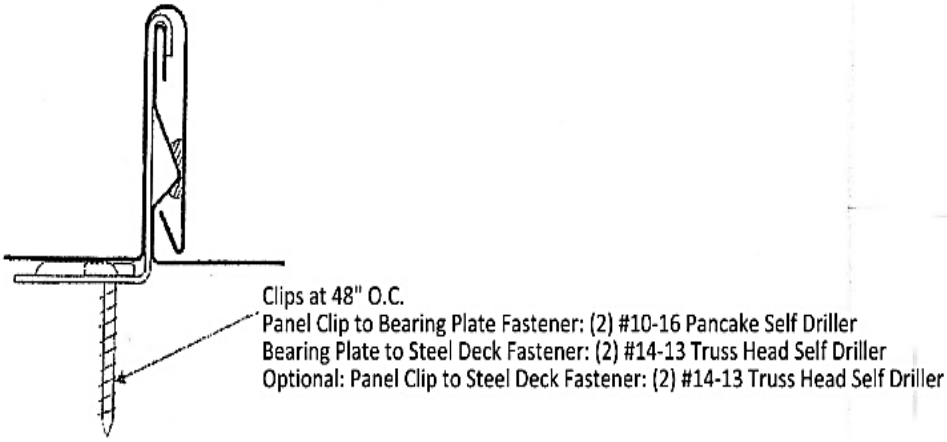

IL20 SEAM PROFILE

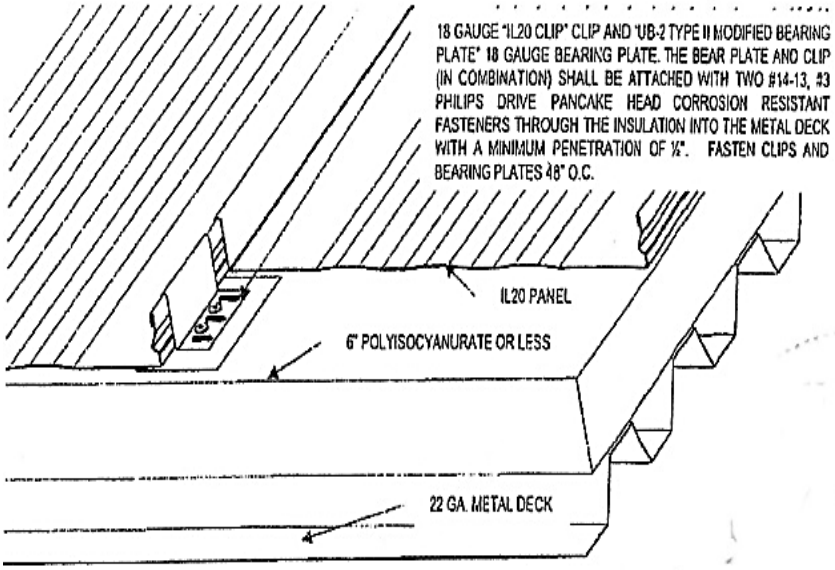

IL20 ASSEMBLY ISOMETRIC